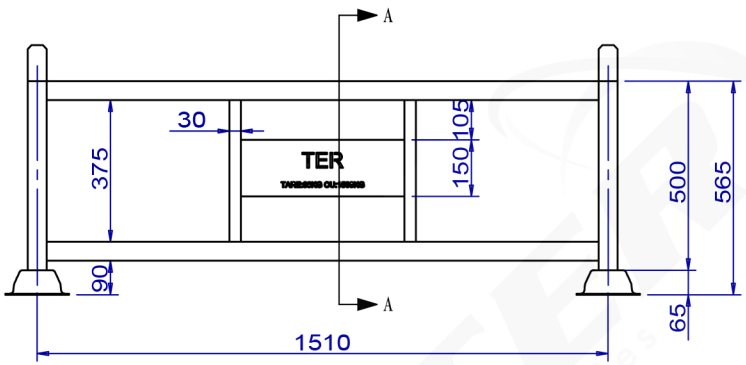

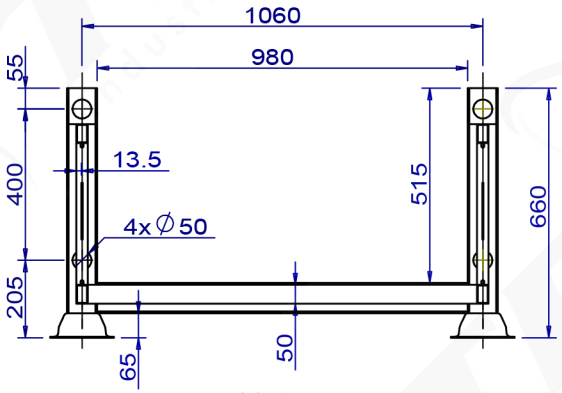

剖面 A-A

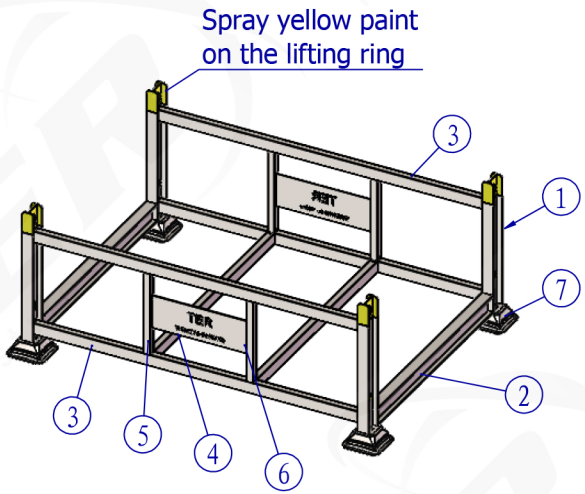

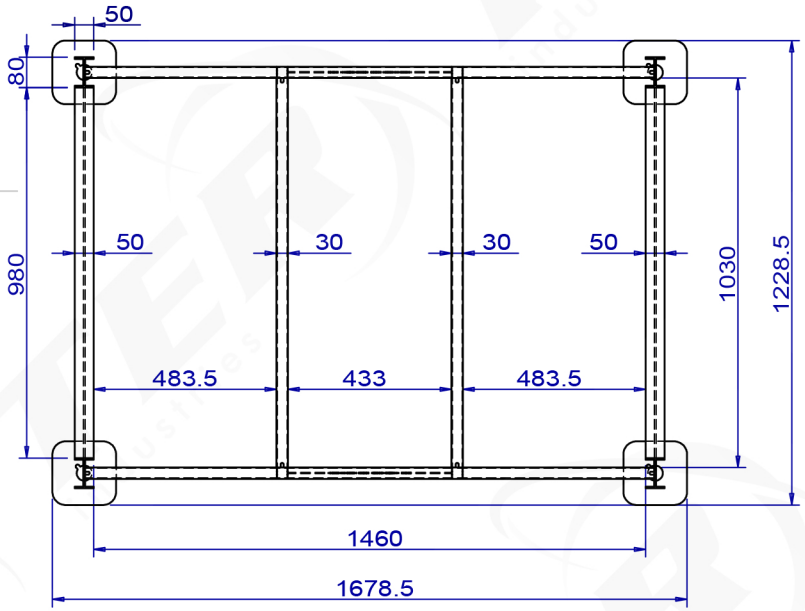

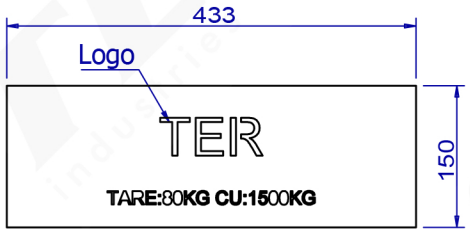

No	Ref	Designation	Qte
1	TER PAN08-1	I-beam 80x50x4.5 L:595mm	4
2	TER PAN08-2	I-beam 80x50x4.5 L:980mm	2
3	TER PAN08-3	Tube 50x30x2 L:1505.5mm	4
4	TER PAN08-4	Tube 50x30x2 L:1030mm	2
5	TER PAN08-5	Tube 30x30x2 L:375mm	4
6	TER PAN08-6	Nameplate 3mm	2
7	Coupelle-L	168.5x168.5x65-3mm	4

TER INDUSTRIES.CO.,LTD
No.151 Xiaokang road, Dongchen town,
Rugao city Jiangsu province, China
Ph: +86 19555080700
E-mail: info@ter-industries.com

REV.	DATE	CREATE/MODIFICATION	SIGNATURE
A	2020/1/1	CREATE	Linda

	NAME	DATE
DRAWN	Linda	2020/1/1
CHK'D		
APPV'D		

MATERIAL: Q235

TITLE: Basket 1679x1229x660

DWG NO. TER PAN08

FORMAT A4

WEIGHT:61.00kg | FINISH: Hot dip galvanizing | SCALE:1:20 | SHEET 1 OF 1 | REV. : A