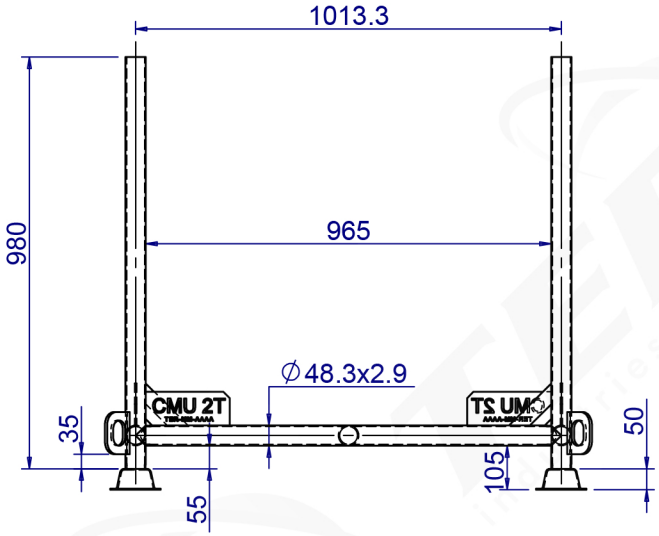

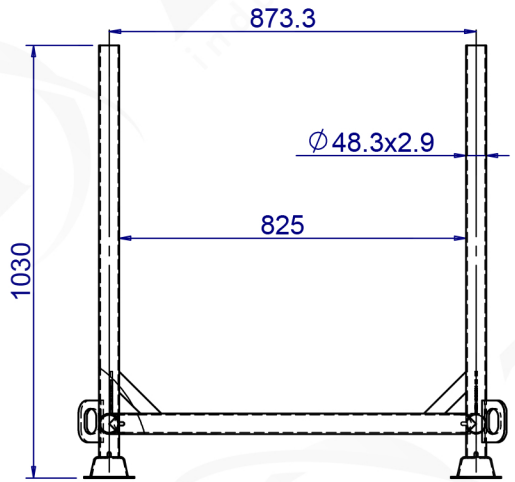

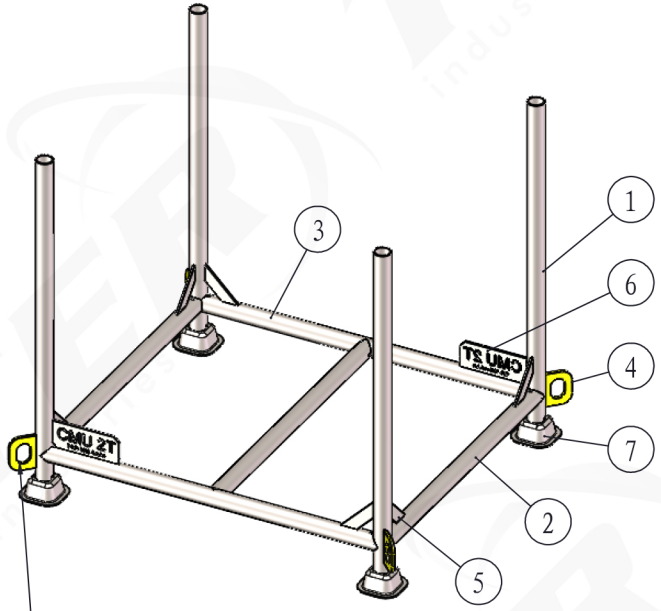

Spray yellow paint on the lifting ring

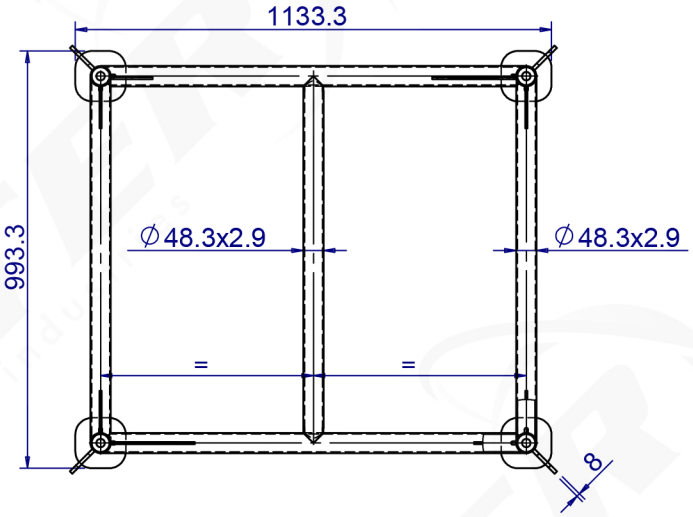

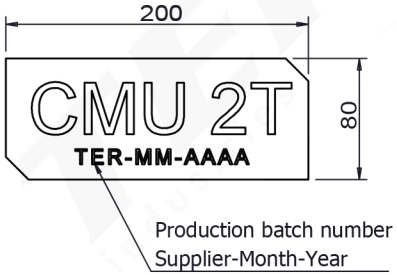

No	Ref	Designation	Qte
1	PAN01-1	Tube Φ48.3x2.9 L:980mm	4
2	PAN01-2	Tube Φ48.3x2.9 L:873.3mm	3
3	PAN01-3	Tube Φ48.3x2.9 L:1013.3mm	2
4	PAN01-4	Plat 75x100 8mm	4
5	PAN01-5	Plat 35x141 5mm	6
6	PAN01-6	Plat 35x141 5mm	2
7	Coupelle	120x120-50 3mm	4

TER INDUSTRIES.CO.,LTD
No.151 Xiaokang road, Dongchen town,
Rugao city Jiangsu province, China
Ph: +86 19555080700
E-mail: info@ter-industries.com

TITLE:

Basket 1160x1020x1030

					NAME	DATE
				DRAWN	Linda	2023/1/1
				CHK'D		
				APPV'D		
A	2023/1/1	CREATE	Linda	MATERIAL:	Q235	
REV.	DATE	CREATE/MODIFICATION	SIGNATURE			

DWG NO. TER PAN01

FORMAT A4

WEIGHT: 32.50kg | FINISH: Hot dip galvanizing | SCALE:1:20 | SHEET 1 OF 1 | REV. : A