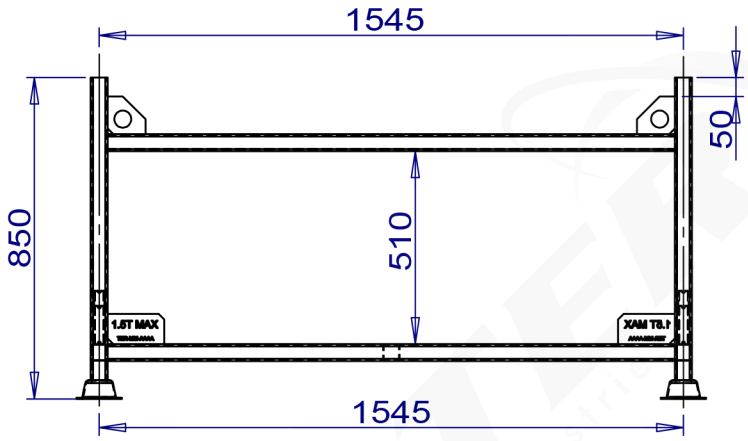

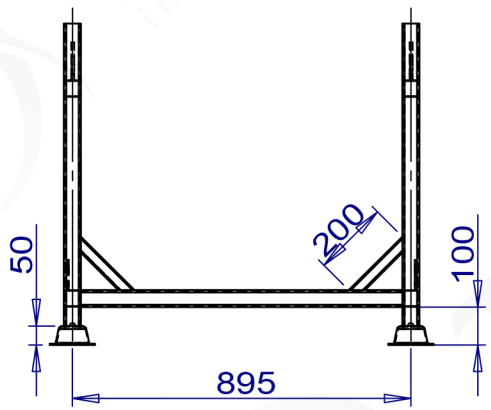

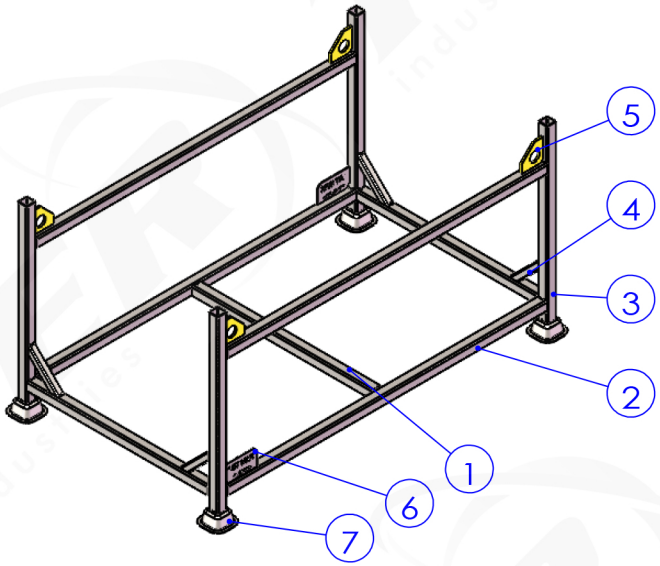

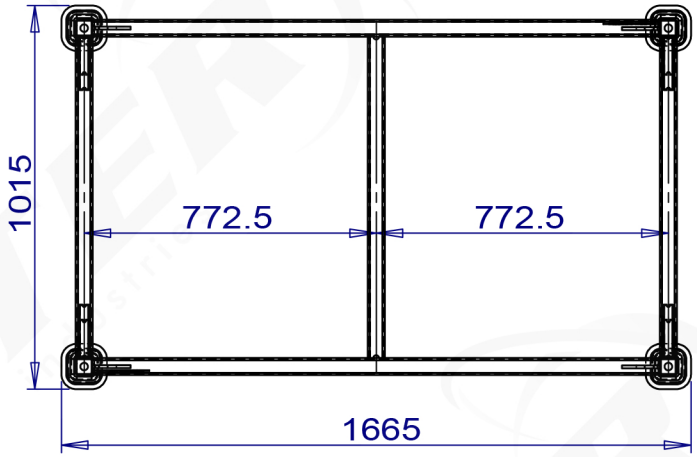

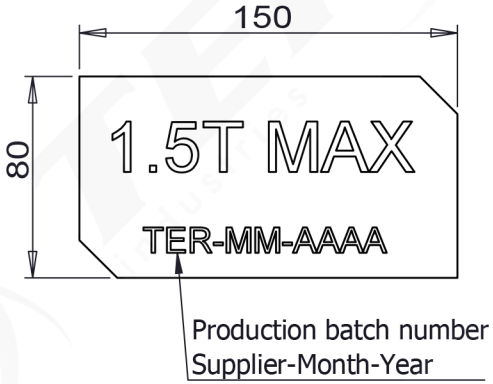

No	Ref	Signation	Qte
1	TER PAN04-1	Square tube 45x45x3 L:850mm	3
2	TER PAN04-2	Square tube 45x45x3 L:1500mm	4
3	TER PAN04-3	Square tube 45x45x3 L:800mm	4
4	TER PAN04-4	Square tube 30x30x2 L:200mm	4
5	TER PAN04-5	Lifting 8mm	4
6	TER PAN04-6	Nameplate 3mm	2
7	Coupelle	120x120-50 3mm	4

TER INDUSTRIES.CO.,LTD
No.151 Xiaokang road, Dongchen town,
Rugao city Jiangsu province, China
Ph: +86 19555080700
E-mail: info@ter-industries.com

					NAME	DATE
				DRAWN	Linda	2023/1/1
				CHK'D		
				APPV'D		
A	2023/1/1	CREATE	Linda	MATERIAL:	Q235	
REV.	DATE	CREATE/MODIFICATION	SIGNATURE			

TITLE:

Basket 1665x1015x850

DWG NO. TER PAN04

FORMAT A4

WEIGHT:50.00kg | FINISH: Hot dip galvanizing | SCALE:1:10 | SHEET 1 OF 1 | REV. : A