1	MOB 130-1	Tube 30x30x2 L:1230mm	2
2	MOB-2	Tube 30x30x2 L:470mm	4
3	MOB-3	Plat plié 30x6 485mm	2
4	MOB-4	Plat plié 20x8 265mm	1
5	MOB-5	Talon 8mm	2
6	MOB-6	Clavette 3mm	1
7	ISO 4014 - M10 x 55	Bolt M10x55	2
8	ISO 7040-M10	Nut M10 - Nylstop	2
9	ISO 4014 - M6 x 35	Bolt M6x35	1
10	ISO 7040-M6	Nut M6 - Nylstop	1

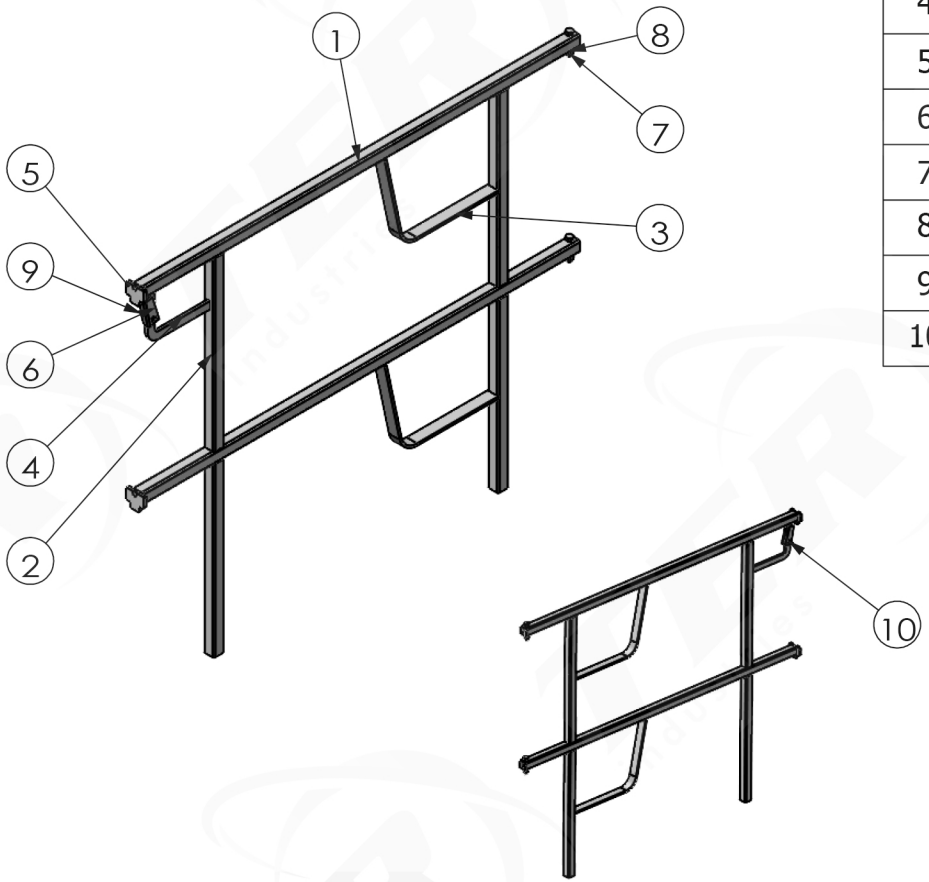

Hot dip galvanized

TER INDUSTRIES.CO.,LTD
No.151 Xiaokang road, Dongchen town,
Rugao city Jiangsu province, China
Ph: +86 19555080700
E-mail: info@ter-industries.com

					NAME	DATE
				DRAWN	Linda	2023/8/29
				CHK'D		
				APPV'D		
				MATERIAL:	Q235	
A	2023/8/29	CREATE	Linda			
REV.	DATE	CREATE / MODIFICATION	SIGNATURE	FINISH: Hot Dip Galvanizing		

TITLE:

CADRE ETAI TER MOBILE 130

DWG NO. MOB 130

FORMAT A4

WEIGHT: 9.453kg | SCALE: 1:50 | SHEET 2 OF 2 | REV: A