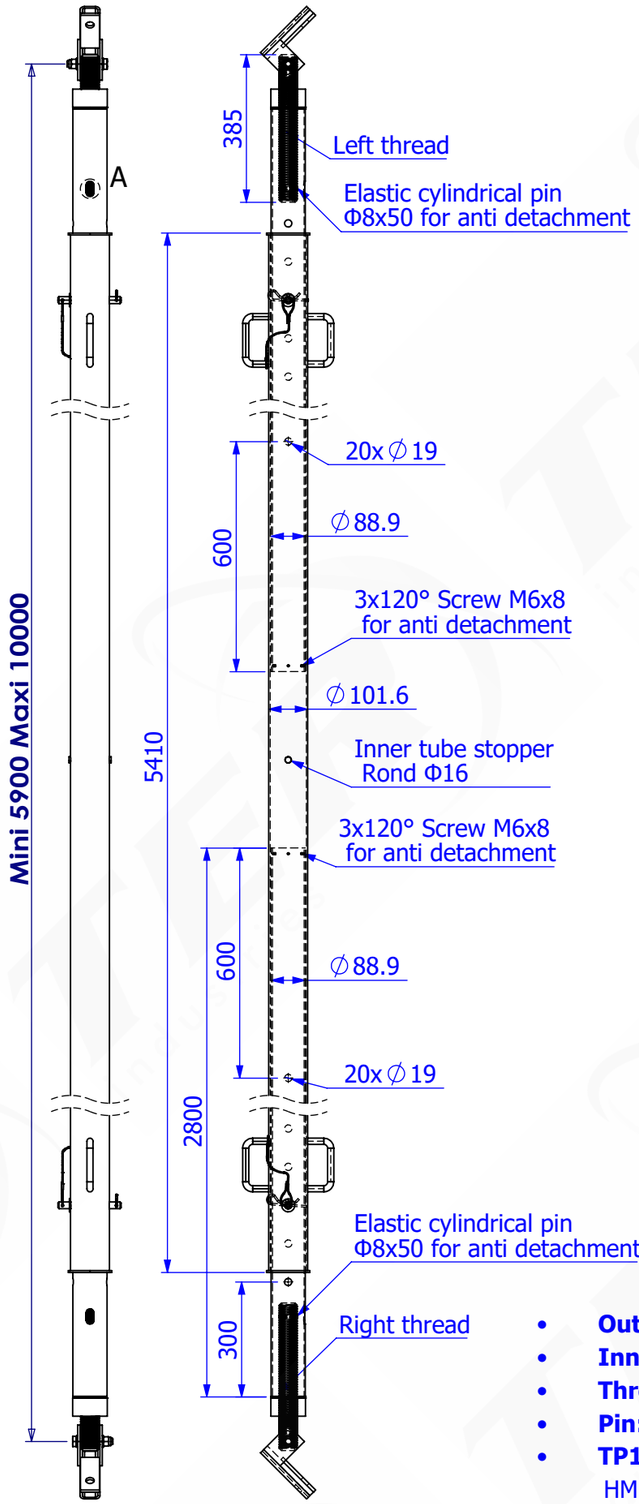

Container 40OT :
12 baskets x 20 pcs=240 pcs （ 24 tons ）

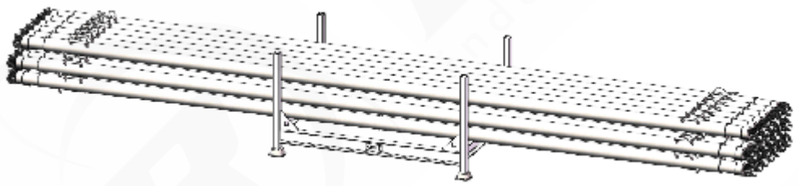

DETAIL A
(1 : 1.5)

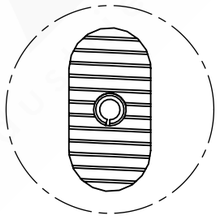

Steel S355

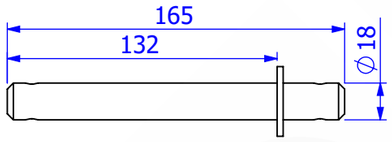

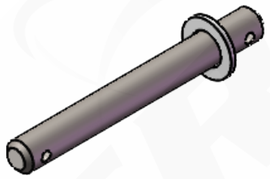

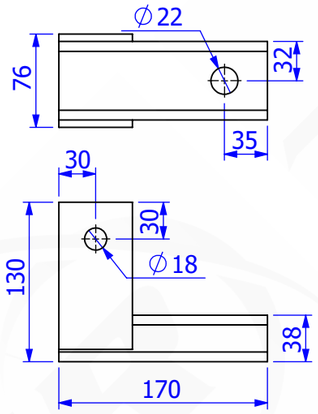

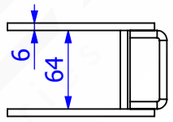

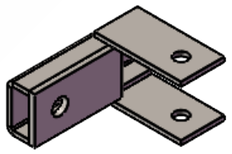

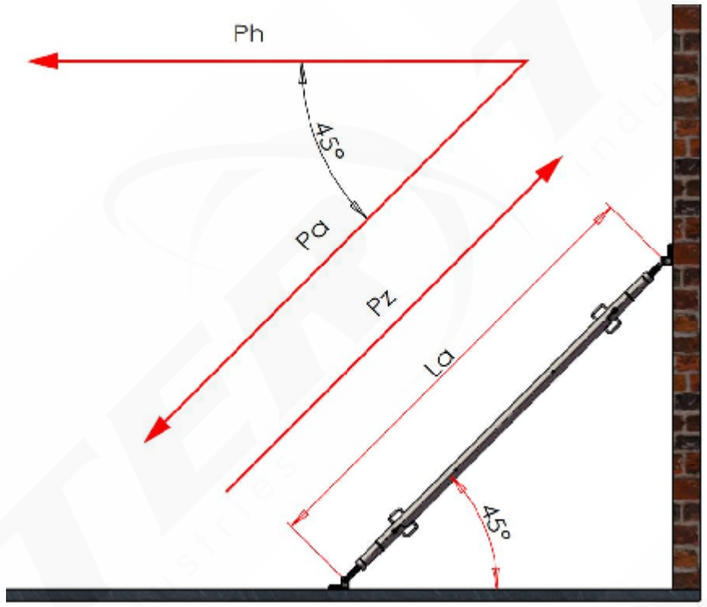

CAPACITY LOAD				
EXTENSION		COMPRESSION FORCE		TRACTION FORCE
(m)	(feet)	Ph (kN)	Pa (kN)	Pz (kN)
6,5	21' 4"	33,60	47,50	50,00
7,0	23' 0"	31,20	44,10	50,00
7,5	24' 7"	22,00	31,10	50,00
8,0	26' 3"	19,40	27,50	50,00
8,5	27' 11"	17,30	24,50	50,00
9,0	29' 6"	15,00	21,20	50,00
9,5	31' 2"	13,50	19,10	50,00
10,0	32' 10"	12,00	17,00	50,00

SECURITY COEFFICIENT 2.0

Hot galvanized following EN-ISO 1461

- **Outer tube:** Φ101.6 x 3.6 mm
- **Inner tube:** Φ88.9 x 3.2 mm
- **Threaded rod:** Φ48.5 x 8 mm, S355
- **Pin:** Φ18 mm, lg 165, S355
- **TP1000-2 endplates:** length 185 mm attachment using HM16 x 95 bolts + HM16 nut in Φ17 mm hole
- **INNER TUBE STOPPER:** Φ16 mm lg 110, S235
- **Shoe drilling diameter:** Φ22 mm

TOTAL WEIGHT OF THE ELEMENT: 100.00 kg

TER INDUSTRIES.CO.,LTD
No.151 Xiaokang road, Dongchen town,
Rugao city Jiangsu province, China
Ph: +86 19555080700
E-mail: info@ter-industries.com

零件名称TITLE: PLUMBING STRUT TP1000-2

日期DATE : 2023/01/15 | 材质 MATERIAL:

版次REV. : A | 标准 NORM:

图号DWG NO. TERTP1000-2

This drawing is property of the company and its reproduction is not allowed without our written approval.