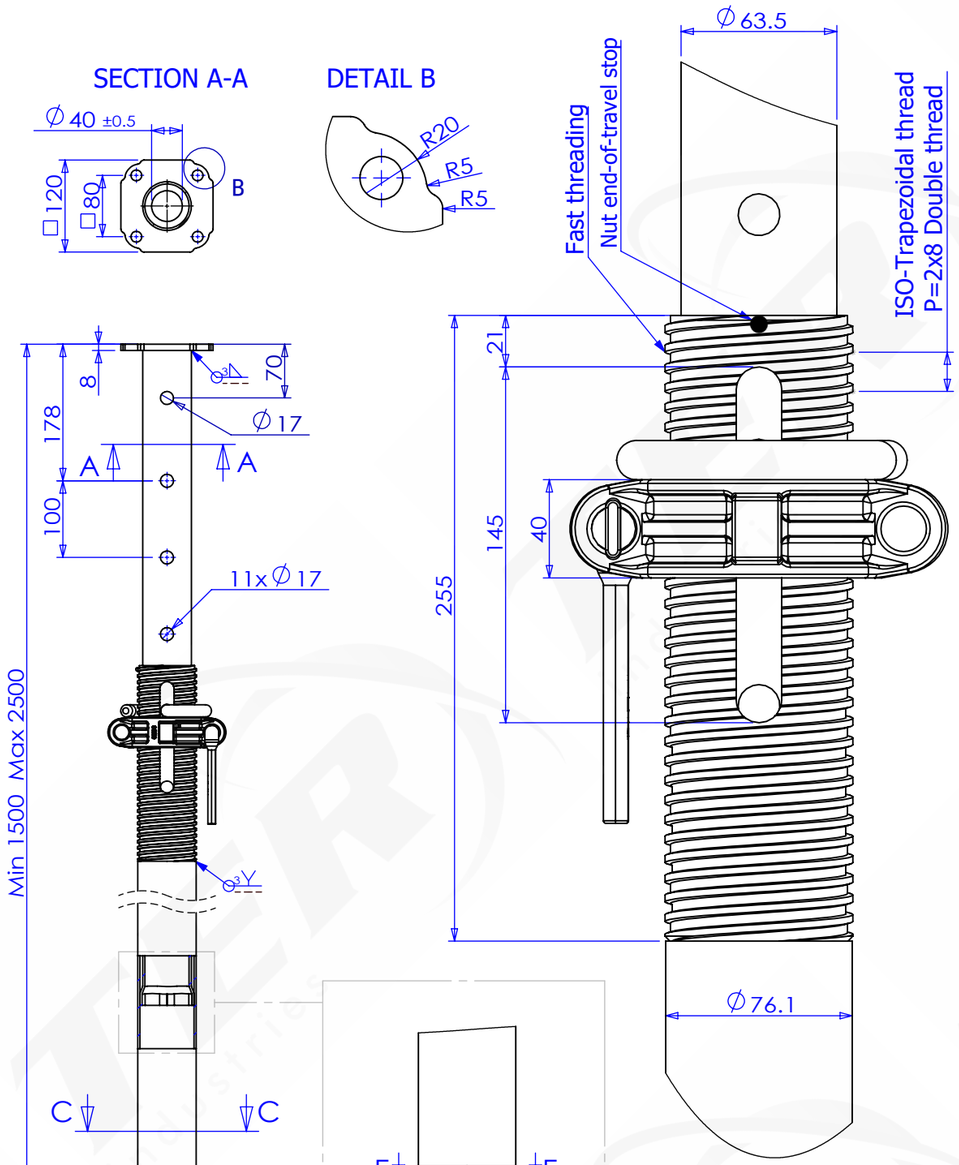

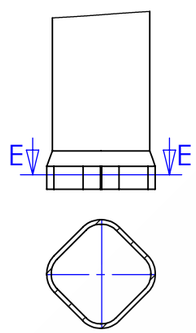

SECTION E-E

Permanent prevention against unintentional disengagement

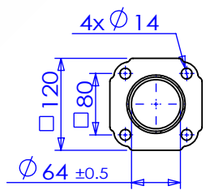

SECTION C-C

Container 20GP : 15 bundles x 50 pcs= 750 pcs (12.6 tons)
Container 40GP : 30 bundles x 50 pcs=1500 pcs (25.2 tons)

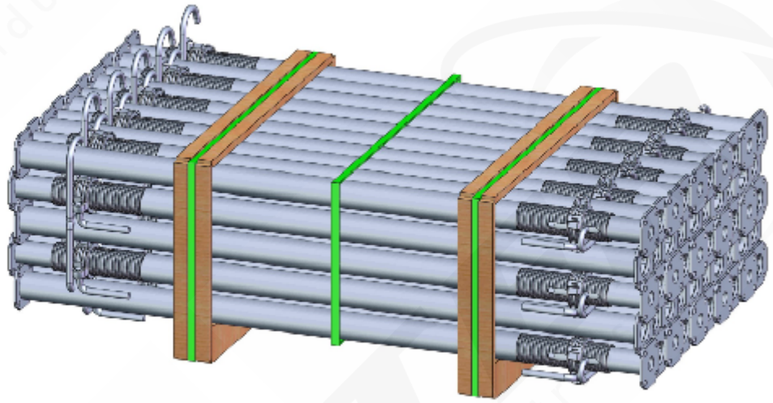

Steel S355

Shaped pin(the geometry is designed to facilitate insertion)

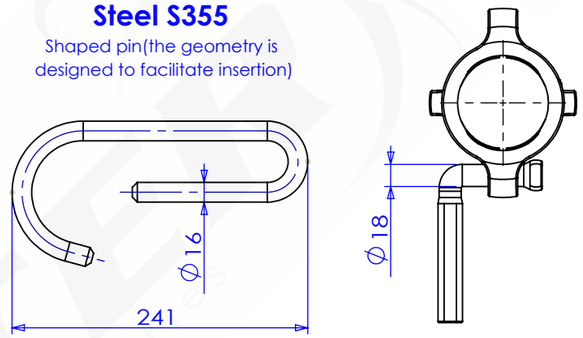

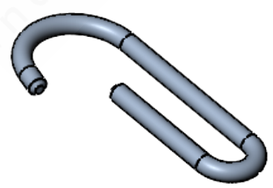

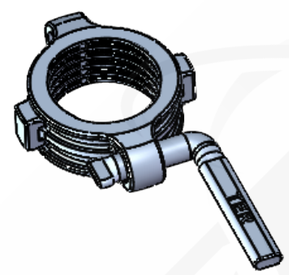

Extension (M)	E25ECO 1,5 to 2,5 (kN)
1,5	30,90
1,6	30,90
1,7	30,90
1,8	30,90
1,9	30,90
2,0	30,90
2,1	30,90
2,2	30,90
2,3	30,90
2,4	30,90
2,5	30,90

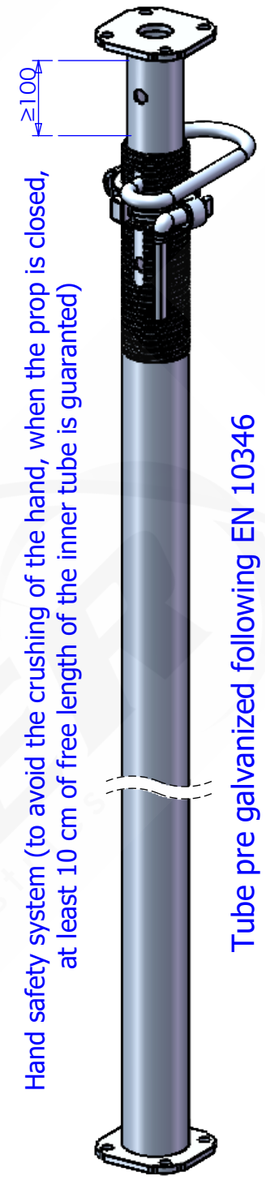

Options:

- Pin with quick release
- Possibility of marking the handle nut
- Applying a sticker
- Painted nut (color of your choice)
- Possibility of engraving a text on the outer tube
- Possibility of packing in racks

TOTAL WEIGHT OF THE ELEMENT: 16.20 kg

TER INDUSTRIES.CO.,LTD
No.151 Xiaokang road, Dongchen town,
Rugao city Jiangsu province, China
Ph: +86 19555080700
E-mail: info@ter-industries.com

日期DATE : 2023/01/15 | 材质 MATERIAL:

版次REV. : A | 标准 NORM: EN 1065-Ü

零件名称TITLE:

PROP EN1065 E25ECO

图号DWG NO.

TERE25ECO

This drawing is property of the company and its reproduction is not allowed without our written approval.