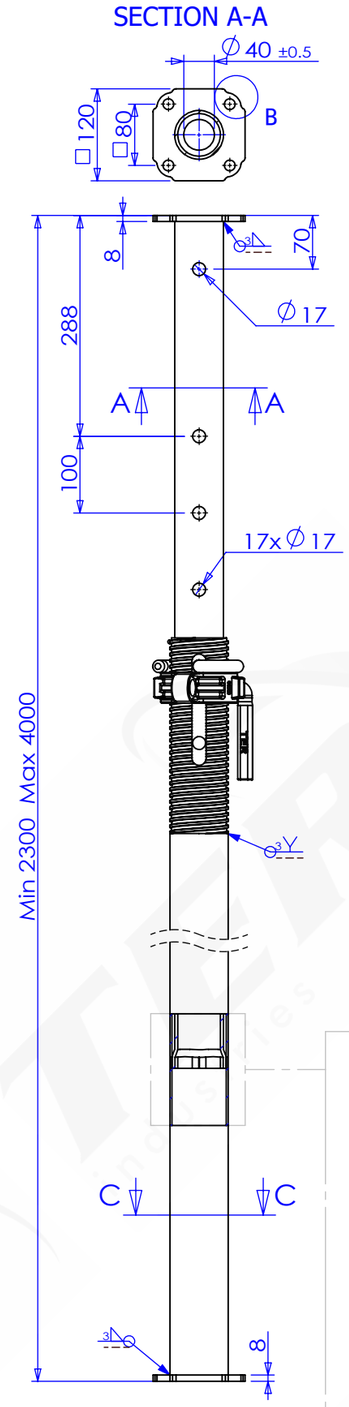

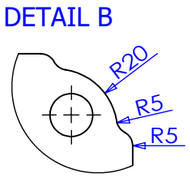

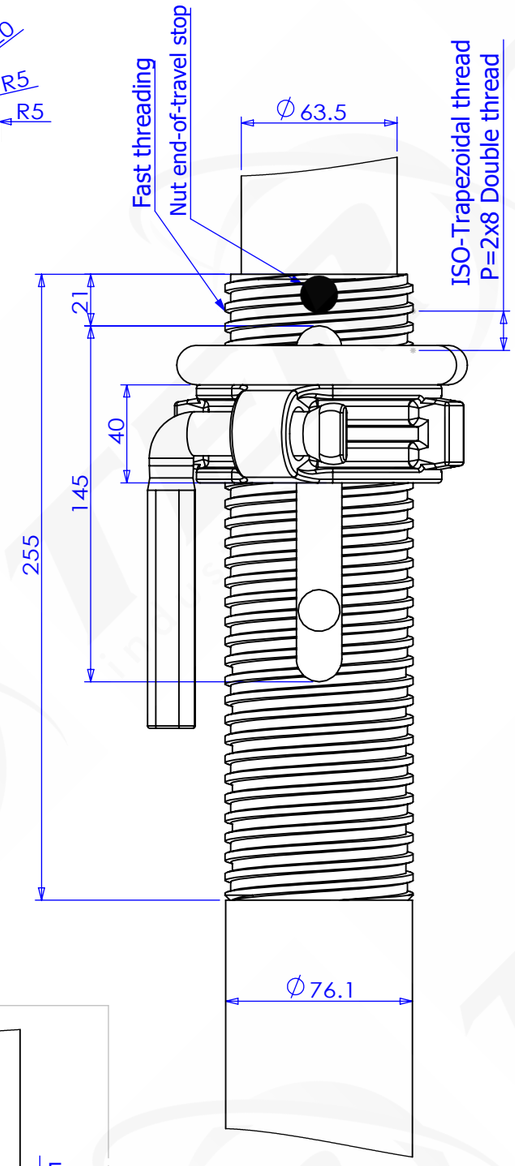

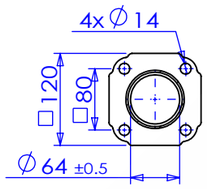

SECTION C-C

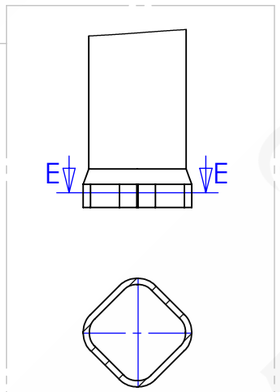

SECTION E-E
Permanent prevention against unintentional disengagement

Container 40OT：19 bundles x 50 pcs=950 pcs（26 tons）

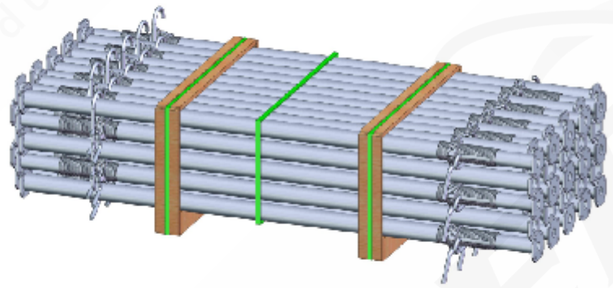

Steel S355

Shaped pin(the geometry is designed to facilitate insertion)

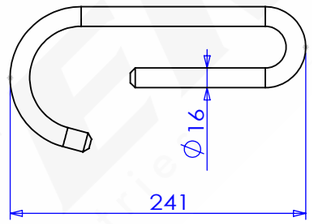

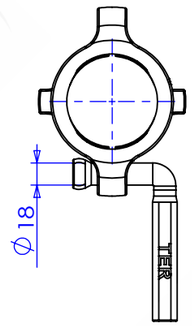

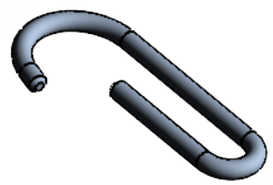

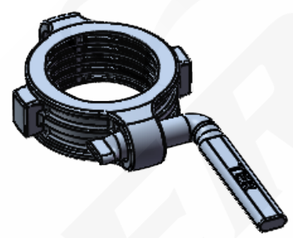

Extension (M)	E40ECO 2,3 to 4 (kN)
2,3	30,90
2,4	30,90
2,5	30,90
2,6	30,90
2,7	30,90
2,8	30,90
2,9	30,90
3,0	30,90
3,1	30,90
3,2	30,90
3,3	30,90
3,4	30,90
3,5	30,90
3,6	30,90
3,7	30,90
3,8	30,90
3,9	30,90
4,0	30,90

Hand safety system (to avoid the crushing of the hand, when the prop is closed, at least 10 cm of free length of the inner tube is guaranted)

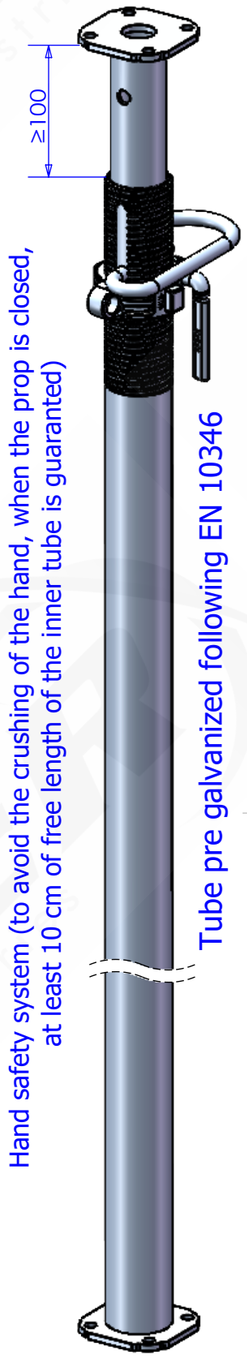

Tube pre galvanized following EN 10346

Options:

- Pin with quick release
- Possibility of marking the handle nut
- Applying a sticker
- Painted nut (color of your choice)
- Possibility of engraving a text on the outer tube
- Possibility of packing in racks

TOTAL WEIGHT OF THE ELEMENT: 26.70 kg

TER INDUSTRIES.CO.,LTD
No.151 Xiaokang road, Dongchen town,
Rugao city Jiangsu province, China
Ph: +86 19555080700
E-mail: info@ter-industries.com

日期DATE : 2023/01/15 | 材质 MATERIAL:

版次REV. : A | 标准 NORM: EN 1065-Ü

零件名称TITLE:

PROP EN1065 E40ECO

图号DWG NO.

TERE40ECO

This drawing is property of the company and its reproduction is not allowed without our written approval.